Transfer of heaving forces by adfreezing to columns and foundation walls in frost-susceptible soils

Penner, E.; Gold, L. W.

Publisher's version / Version de l'éditeur:

Canadian Geotechnical Journal, 8, 4, pp. 514-526, 1971-11

NATIONAL RESEARCH COUNCIL OF CANADA
CONSEIL NATIONAL DE RECHERCHES DU CANADA

TRANSFER OF HEAVING FORCES BY ADFREEZING TO COLUMNS AND FOUNDATION WALLS IN FROST-SUSCEPTIBLE SOILS

BY

E. PENNER AND L. W. GOLD

Reprinted from
CANADIAN GEOTECHNICAL JOURNAL
Vol. 8, No. 4, November 1971
p. 514

RESEARCH PAPER NO. 496
OF THE
DIVISION OF BUILDING RESEARCH

OTTAWA
November 1971

Price 25 cents

NRCC 12177

Transfer of Heaving Forces by Adfreezing to Columns and Foundation Walls in Frost-Susceptible Soils[1]

E. PENNER AND L. W. GOLD

Geotechnical Section, Division of Building Research, National Research Council of Canada, Ottawa, Canada

Received May 28, 1971

The paper gives results of field studies on uplift forces on small-diameter columns of steel, concrete, and wood caused by adfreezing in frost-susceptible Leda clay. Adfreeze strength values would appear to be highest for steel and concrete, followed closely by wood. The heaving pattern and the heaving force transmitted are shown to be different for long foundation walls than for isolated columns. This compares favorably with the deformation pattern induced in an ice cover around offshore structures, during a change in water level. Attention is also given to the relative movement of the heaving soil with respect to the structure and the influence of the heave pattern on the transmission of forces.

Cet article présente les résultats d'études in situ des forces de soulèvement, agissant sur des colonnes de faible diamètre, en acier, en béton et en bois, et causées par l'adhérence de glace dans les argiles Leda gelives. Les valeurs de résistance en adhérence de la glace apparaissent les plus fortes pour l'acier et le béton, supérieures de peu à celles observées pour le bois. Le schéma de soulèvement de même que la force de soulèvement transmise sont différents pour des murs de fondation longs et pour des colonnes isolées. Dans ce dernier cas ils sont assez semblables aux schémas de déformation induits dans un champ de glace autour des structures 'off-shore' lors d'une variation du niveau d'eau. Le mouvement relatif du sol en soulèvement par rapport à la structure de même que l'influence du schéma de soulèvement sur la transmission des forces, sont également considérés.

Introduction

Adfreezing of soil to foundations and subsequent uplift and distortion of relatively light structures is a serious problem in frost-susceptible soils if no special provisions have been made to avoid or counteract such forces. It is now well recognized that placing footings below the depth of frost penetration does not circumvent the problem of frost heave damage if adfreezing of the soil to the foundation wall is permitted. Uplift forces caused by frost heaving in the active layer of permafrost areas have been shown to be substantial (Crory and Reed 1965; Vialov 1959). Adfreezing forces in areas of seasonal frost were studied and reported some years ago by Trow (1955) and more recently by Kinosita and Ono (1963), and Penner and Irwin (1969); they are also discussed in recent translations of Russian studies (Tsytovich 1959; Saltykov 1944).

In areas of seasonal frost, the transmission of heaving forces by adfreezing is a common occurrence in relatively light unheated buildings, transmission towers, transformer and distribution station foundations, utility poles and posts. Problems of frost heaving arise also at entrances to basement garages and various unheated structures attached to domestic dwellings such as garages and porches that are at least partially outside the thermal influence of the heated structure (Penner and Burn 1970).

A previous paper (Penner and Irwin 1969) dealt with a study of heaving forces that result from adfreezing on small-diameter steel pipes in frost-susceptible Leda clay during several winters. This field installation was subsequently enlarged to permit comparisons of adfreeze strengths for small diameter columns of different materials, which is the subject of this paper. Also included in the study was a concrete block foundation wall for which the vertical forces due to heaving and the vertical movement of the ground surface in the vicinity of the wall were measured.

Adfreezing—Heaving Soil

Frost heave in soils is usually in the direction of heat flow and perpendicular to the plane of ice lenses. If the soil is frozen to a pile or foundation unit, heaving will impose a vertical force on it. "Adfreezing" or "frost grip" between the soil and a structural element is not

[1]NRCC No. 12177.

harmful unless the lifting force transmitted is sufficient to heave the structure. Under field conditions the force developed on a structural unit will depend on the frost action characteristics of the soil and the size and geometry of the foundation. If displacement occurs it is seldom uniform and can cause destructive distortion and cracking.

A knowledge of deformation behavior of frozen soil around a foundation and of the nature of the bond between the soil and structure is required when calculating the forces that may be imposed. A number of possible types of deformation for columns are shown in Fig. 1. The assumption in Fig. 1*a* is that the frozen ground is a rigid body and that the frost heave displacement of this layer in relation to the fixed pile can occur only as a result of shear accompanied by crushing of ice crystals along the interface between the frozen ground and the pile. In Fig. 1*b* the assumption is that the soil is firmly frozen to the pile and that the ultimate force transmitted depends on the elastic modulus and thickness of the frozen layer and the elastic modulus of the underlying material.

Saltykov (1944) carried out model studies in the laboratory to establish the nature of the deformation of the heaving soil around fixed circular wooden posts. The deformation behavior depicted in Fig. 1*c* was shown to exist around 5-cm (2-in.) diameter wooden posts when heaving conditions were imposed. By placing horizontal layers of colored chalk between layers of soil the deformation was shown to occur in the frozen soil within the 1-cm thick layer in contact with the column surface. He concluded that the assumed deformation characteristics used in earlier calculations by others, shown in Figs. 1*a* and 1*b*, were incorrect.

In field studies Saltykov also found that for an anchored pile 18 cm (7.1 in.) in diameter, the ground heaved the same amount (5 cm) from the pile as at some distance from the pile. Similar results with 3½-in. (8.9-cm) steel pipes are reported by Penner and Irwin (1969). From the field studies it is difficult to determine whether the movement occurred at the interface between the pile and frozen ground or in a layer of soil adjacent to it.

Two other possibilities are given: Fig. 1*d* shows elastic deformation in the soil in addition to some dislocation at the interface; Fig. 1*e* shows elastic deformation in the soil away from the column and some viscous deformation in the soil close to the column.

Methods and Materials

Site and Soil Conditions

The experiments on small footings were carried out on a 58 by 65 ft (17.7 by 19.8 m) site located on National Research Council of Canada property in Ottawa which has been described in some detail in earlier papers (Penner and Irwin 1969; Penner 1970). The soil is a postglacial clay of marine origin commonly referred to as Leda clay (Crawford 1961). The autumn moisture content is about 44%, and particle size analyses show that the soil consists of about 70% clay-size particles and 30% silt-size particles. The depth to bedrock varies between 11 and 20 ft (3.4 to 6.1 m). The bedrock served as a convenient means of anchoring the reaction frame for force measurements. The test site was cleared of snow throughout the winter to a distance of at least 10 ft (3.5 m) beyond the location of the test installations.

Design of Reaction Frames for Columns and Foundation Wall

The reaction cross frame used for the circular columns is shown in Fig. 2. It consisted of two 6 I 12½ steel beams anchored to bedrock at the four corners with ¾-in. (3.2-cm) expansion shell located at a depth of 2 ft (0.61 m) below the bedrock surface. Each rock bolt assembly has a predicted breaking strength of 35 000 lb (15 873 kg). The force measurements were made with a calibrated 10 000 lb (4 535 kg) Dillon force gauge.

The reaction frame used to measure the heaving force on the 4-ft-long (1.22-m) concrete block wall has been described (Penner 1970). Basically it consisted of a reinforced H-frame of 6 I 12½ steel beams anchored with four rock bolts to bedrock at a depth of 12 ft (3.66 m). The expansion shells were placed 18 in. (45.7 cm) below the rock surface. Force measurements were made with a calibrated 50 000 lb (22 675 kg) Dillon force gauge located about 3½ in. (8.9 cm) from the end of the frame (Fig. 3). A dummy gauge placed at an equal distance from the other end was designed to have approximately the same load deflection characteristics as the force measurement gauge.

Column Construction

The 3½-in. o.d., 3-in. i.d. (8.9-cm o.d., 7.6-cm i.d.) steel columns consisted of rolled steel pipe. The pipes were filled with grease and capped to prevent internal convection due to thermal gradients. The outside surfaces were washed with solvent to remove any grease before installation.

The wooden columns were turned to a 3½ in. diameter (8.9 cm) from 4- by 4-in. cedar posts. At the time of installation the finished surface was smooth and clean. The concrete columns were made from premix concrete placed inside a 3½-in. i.d. (8.9-cm) clear plastic pipe form. A reinforcing rod was placed down the center line of this column to improve the

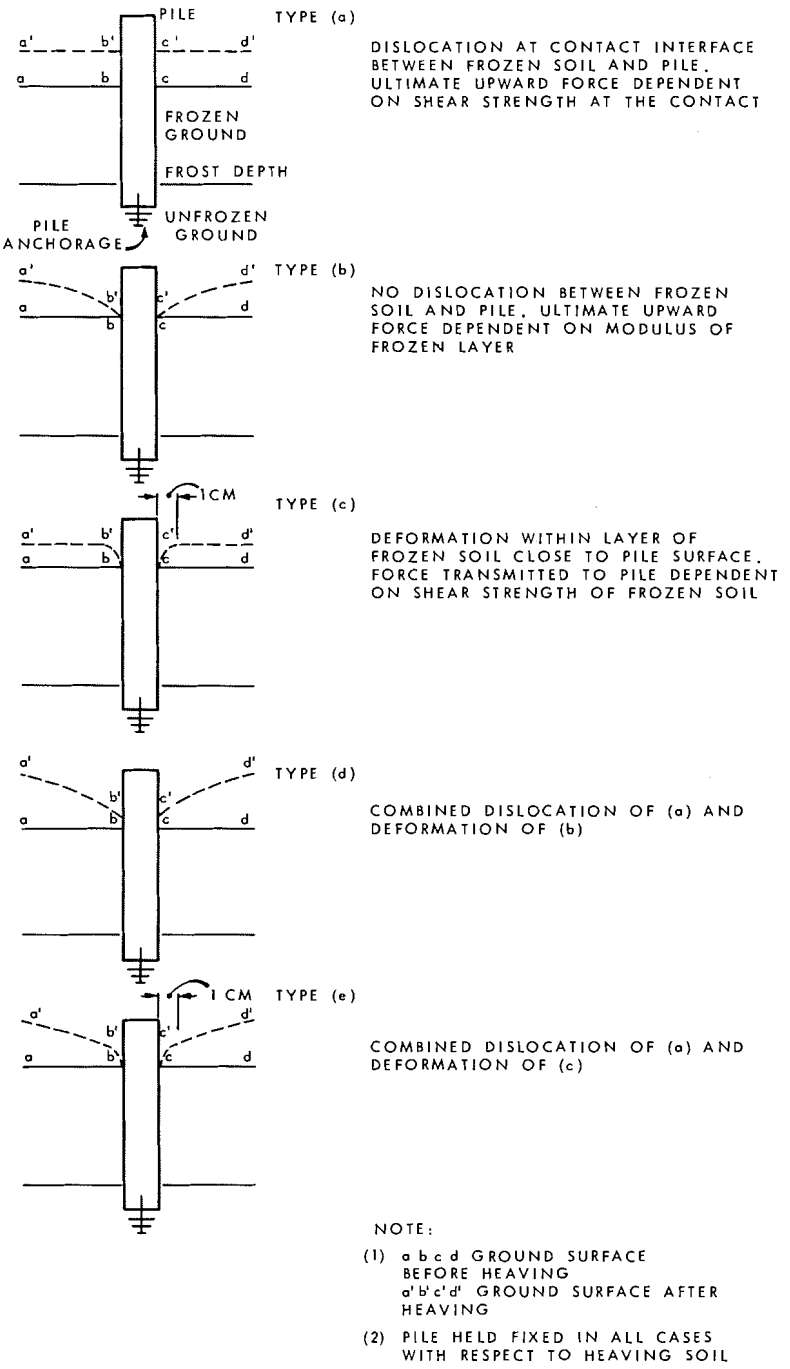

FIG. 1. Possible zone of dislocation and regions of deformation in a frozen layer when a small diameter pile is held stationary in a frost heaving soil during frost penetration.

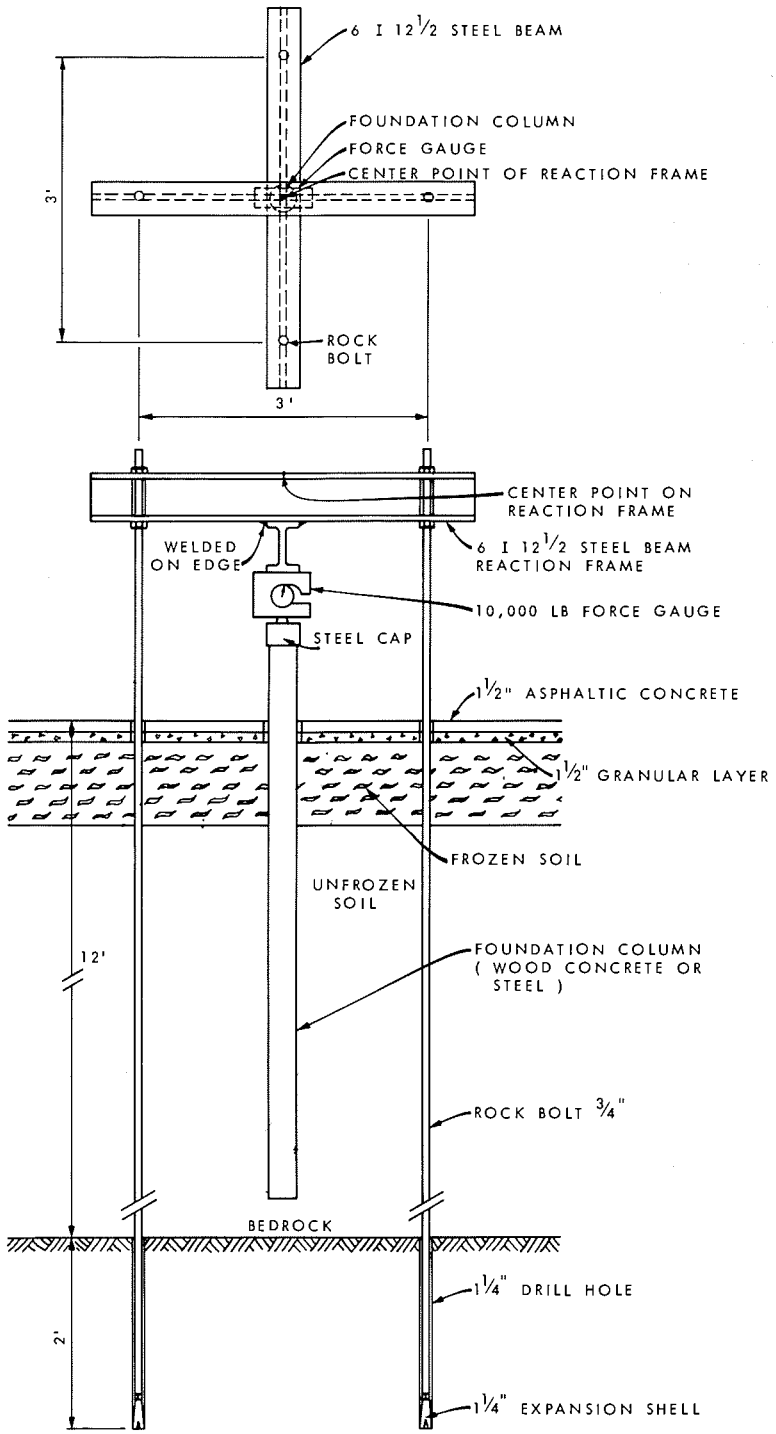

FIG. 2. Reaction frame for measurement of uplift forces of small diameter piles.

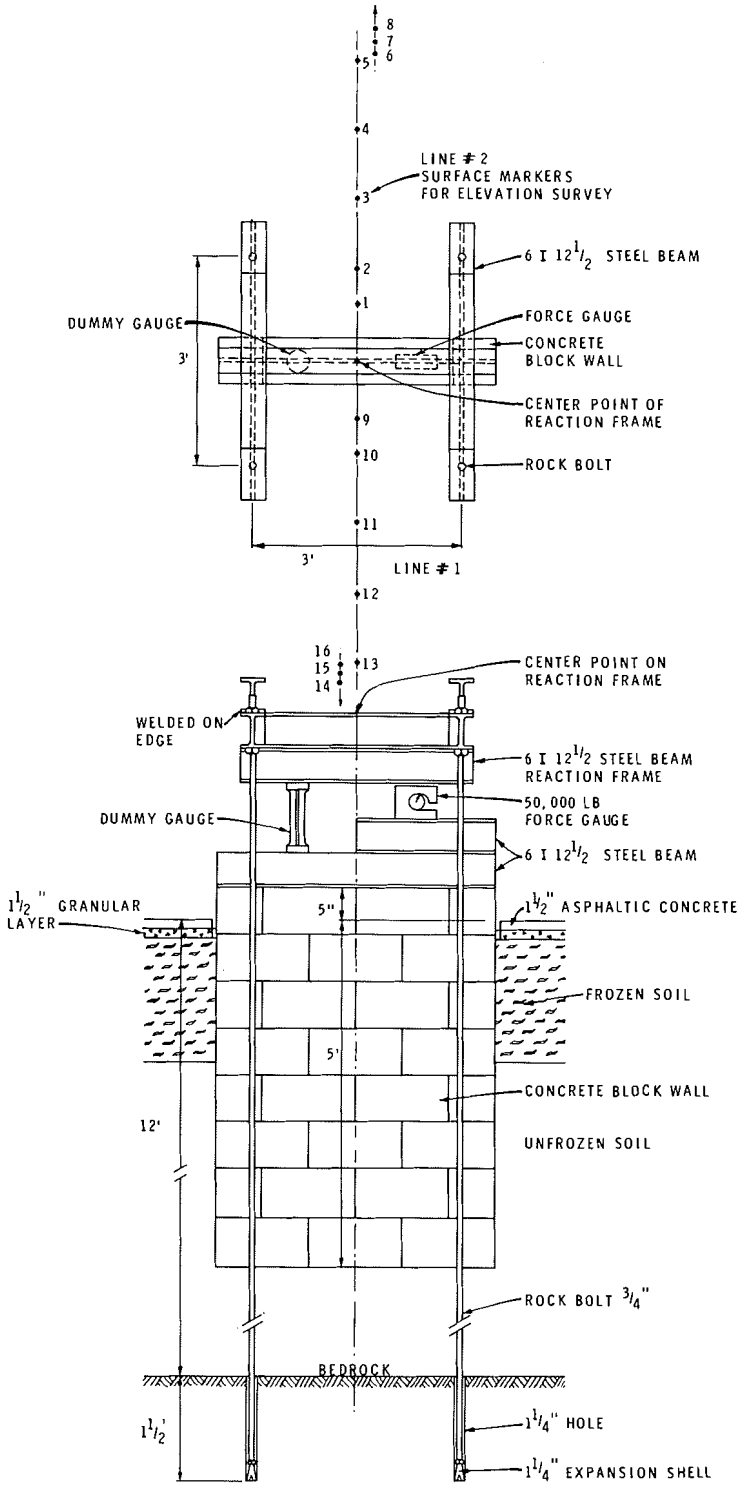

FIG. 3. Installation to measure heaving forces by adfreezing on concrete block wall.

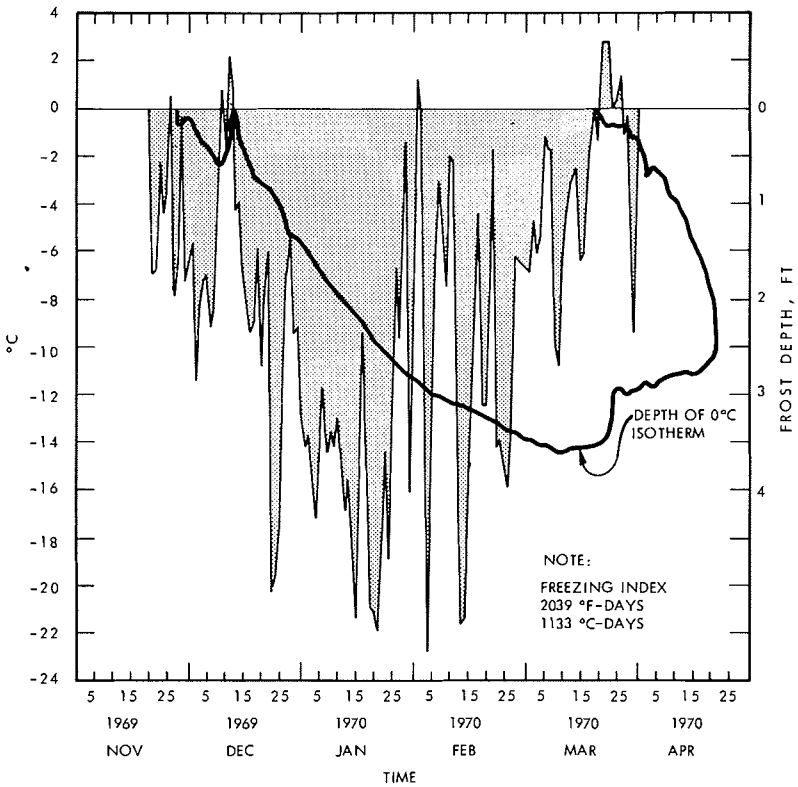

FIG. 4. Daily average temperature and frost depth 1969–70.

strength and for ease of handling. By tapping and vibrating the column it was possible to remove most of the air bubbles from the interface between the concrete and the plastic form, leaving a smooth finish on the outside surface.

Installation of Columns and Concrete Block Wall

Embedment of the 6-ft- (1.83-m) long columns was to a depth of 5 ft (1.52 m), leaving 1 ft (30.5 cm) of column above the ground surface. Columns were installed by augering 6-in. diameter (15.2-cm) holes and backfilling to approximately the natural density with the same soil. The columns were fitted with a ½-in. (1.27-cm) thick steel cap to distribute the load uniformly on the end of the column.

The concrete block wall was constructed in a trench 2 ft (0.61 m) wide, 5 ft (1.52 m) long, and 5 ft (1.52 m) deep. The top of the block wall was about 8 in. (20.3 cm) above the ground surface. As with the columns, the space around the wall was backfilled and compacted to about the same density with the soil removed in excavation.

Soil Temperature Measurements

Soil temperatures were measured at opposite corners on the site at least 10 ft (3.5 m) inside the snow-cleared area to determine the 0° C isotherm for frost depths. Copper-constantan thermocouples were attached to 1-in. (2.5-cm) diameter wooden dowels at 6-in. (15-cm) intervals to 4½ ft (1.37 m). Readings were recorded daily at 0830 h with a data-acquisition system. Air temperatures were obtained from a meteorological station located a few hundred yards from the test site.

Level Surveys

Level surveys, referenced to a rock-anchored benchmark, were carried out weekly to measure the deflection of the reaction frames directly above the force gauges. To this was added the deflection of the Dillon gauges to obtain total movement of the column or foundation wall.

The deformation of the ground surface at right angles to the long dimensions of the block wall was also determined along two lines, as shown in Fig. 3. Lag bolts were installed in the asphalt surface at distances of 6 in. and 1, 2, 3, 4, 5, 6, and 7 ft (0.15 cm, and 0.30, 0.61, 0.92, 1.22, 1.53, 1.83, and 2.14 m) from the wall for the ground level surveys.

Experimental Results

Thermal Conditions

The average daily air temperatures and the frost penetration – time curve based on the position of the 0° C isotherms at two locations on the site are given in Fig. 4. The maximum frost depth, 3.6 ft (1.09 m), was reached on 9

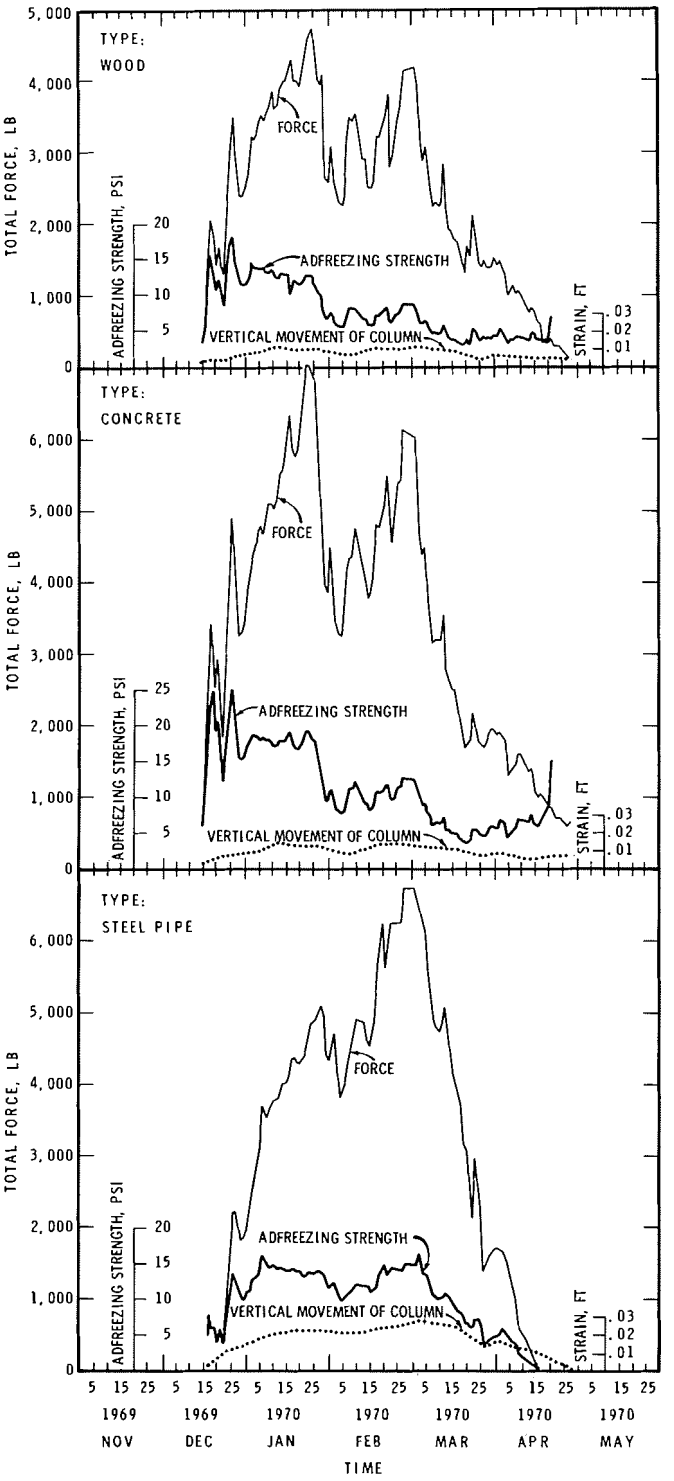

FIG. 5. Measured force, calculated unit adfreezing strength and vertical strain of columns during heaving period. These results are the average of two installations of each type.

TABLE 1. Adfreezing strength on columns

	At Peak Force 1 Jan. 23–30, 1970		At Peak Force 2 Feb. 28–Mar. 1, 1970		Average for Jan. 1970		Average for Feb. 1970		Average for Mar. 1970	
	p.s.i.	kg/cm²	p.s.i.	kg/cm²	p.s.i.	kg/cm²	p.s.i.	kg/cm²	p.s.i.	kg/cm²
Steel	14.0	0.98	16.5	1.16	13.7	0.96	12.4	0.87	8.8	0.62
Concrete	19.5	1.37	13.0	0.91	17.0	1.20	10.3	0.72	5.7	0.40
Wood	13.0	0.91	9.0	0.63	12.0	0.84	7.0	0.49	4.8	0.34

March 1970. This frost depth curve was used to estimate the length of columns and foundation wall attached to the frozen soil for calculation of unit adfreezing forces as the winter progressed.

Column Studies—Concrete, Steel, and Wood

The force measurements, calculated adfreezing strengths and vertical column movement under these forces, given in Fig. 5, are based on the average of two installations of each column type located randomly on the test area. Adfreezing strengths were calculated by dividing the total measured force by the area of the column within the frozen layer.

Maximum movement of the steel columns was 0.028 ft (0.853 cm), 0.014 ft (0.427 cm) for concrete and 0.011 ft (0.335 cm) for wood. These movements were due to the deflection of the force measurement gauge, reaction frames and rock bolt assembly.

There are some noticeable differences in unit area adfreezing strengths in the early part of the winter season. Although the total forces were low, the calculated adfreezing strengths were high for both the wood and concrete columns. These differences may be attributable to the different thermal regimes in the soil induced by the various column types. Measurements in more recent studies at the Division of Building Research have shown that the temperatures of wood and concrete columns and the depth of the 0° C isotherm closely follow the ground temperature pattern in the surrounding area. This point has not been resolved for steel columns with similar depths of embedment in the ground and length of column above the ground surface, nor is such information available in the literature. The possibility exists therefore that during the early winter, the steel columns may be warmer than those composed of wood or concrete because of greater heat conduction from the warmer strata below.

Two peaks of load are evident for all columns. The first one occurred between 23 and 30 January and the second at the end of February and early March. A comparison of adfreeze strengths for the columns may be made on the basis of peak values. A further comparison between columns can be obtained from the average monthly adfreezing force during January, February, and March. These results are given in Table 1.

During the months of January and February the adfreeze strengths remained consistently high for the steel columns which were apparently not so subject to change resulting from short warm or cold periods—a few days in duration—as were the wood and concrete columns. It may be concluded from these field results that the adfreeze strength on wood is somewhat less than for steel or concrete. The overlap in results for these two materials does not allow a conclusion as to which has the higher adfreezing strength. The values obtained for steel columns compare well with results from other winters (Penner and Irwin 1969).

Concrete Block Foundation Wall

The results for the foundation wall concerning total heave force, calculated adfreeze strength and vertical movement are given in Fig. 6. The vertical movement of the wall associated with the deflection of the reaction frame and the Dillon gauge was 0.018 ft (0.548 cm). This maximum was reached, as would be expected, when the vertical load was at a maximum.

The maximum load of 31 000 lb (14 062 kg) occurred at the end of February, which corresponds to the time of the second peak for the columns. With the exception of a few peaks occurring early in the winter, the adfreezing strengths based on the measured depth of frost penetration on the site and the surface area of the wall within the frozen layer ranged

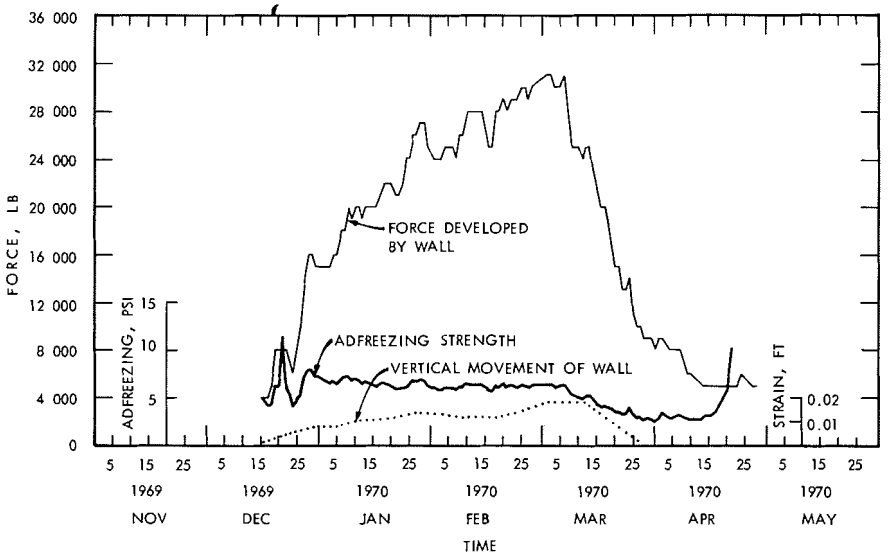

FIG. 6. Measured force, calculated unit adfreezing strength and vertical strain of concrete block wall during heaving period.

from 6.5 to 9 p.s.i. (0.46 to 0.56 kg/cm^2). At the time of the maximum load (end of February) the adfreeze strength was 6.5 p.s.i., which is less than half the adfreeze strengths on the small-diameter concrete columns for the same period.

Comparison of Heaving Force on Columns and Straight Foundation Walls

The heaving pattern around small diameter steel columns observed at the present site in 1966–67 and 1967–68 has been described (Penner and Irwin 1969). During these periods the maximum heaving load on 3½-in. diameter steel columns was in excess of 6 000 lb, giving a maximum average shear stress of approximately 12.5 p.s.i. (0.9 kg/cm^2). The heaving pattern, shown in Fig. 7, shows a uniform heave within a 3-ft (0.92 m) radius of the column. Measurements were not made within a 1-ft radius of the column.

The pattern of heave at right angles to the long axis of the foundation wall was quite different. The average of the heave measurements on lines Nos. 1 and 2 (Fig. 3) are given in Fig. 8. The figure shows a very pronounced differential heave which started early in the winter and increased in severity as the winter progressed. The maximum heave of 0.26 ft (7.93 cm) at a distance of 7 ft (2.14 m) from the wall is equal to the maximum measured elsewhere on the site at a location not influenced by structures, indicating that the influence of the wall does not extend much beyond 7 ft (2.14 m). A comparison of the heaving force throughout the winter gives higher values for the concrete columns than for the concrete walls. At the time of maximum load (end of February) the ratio was about 2:1.

A qualitative appreciation of the reason for the shear stress developed on piles being appreciably greater than that developed on a long straight wall by the same amount of frost heave can be obtained from a consideration of the analogous problem for ice covers. The assumption that an ice cover behaves as an elastic plate on an elastic foundation gives an upper bound to the vertical shear stress that the cover will exert on a structure due to a change, H, in water level.

Consider first an isolated pile of radius a, frozen into a cover of thickness h. By St. Venant's principle, the shape of the deflected surface of the cover to within a relatively close distance of the pile will be the same as that caused by an equivalent uniform vertical load applied to the surface of the cover over an area of radius a.

Let Q_p be the total shear load applied by the ice cover to the surface of the pile, q_p the shear

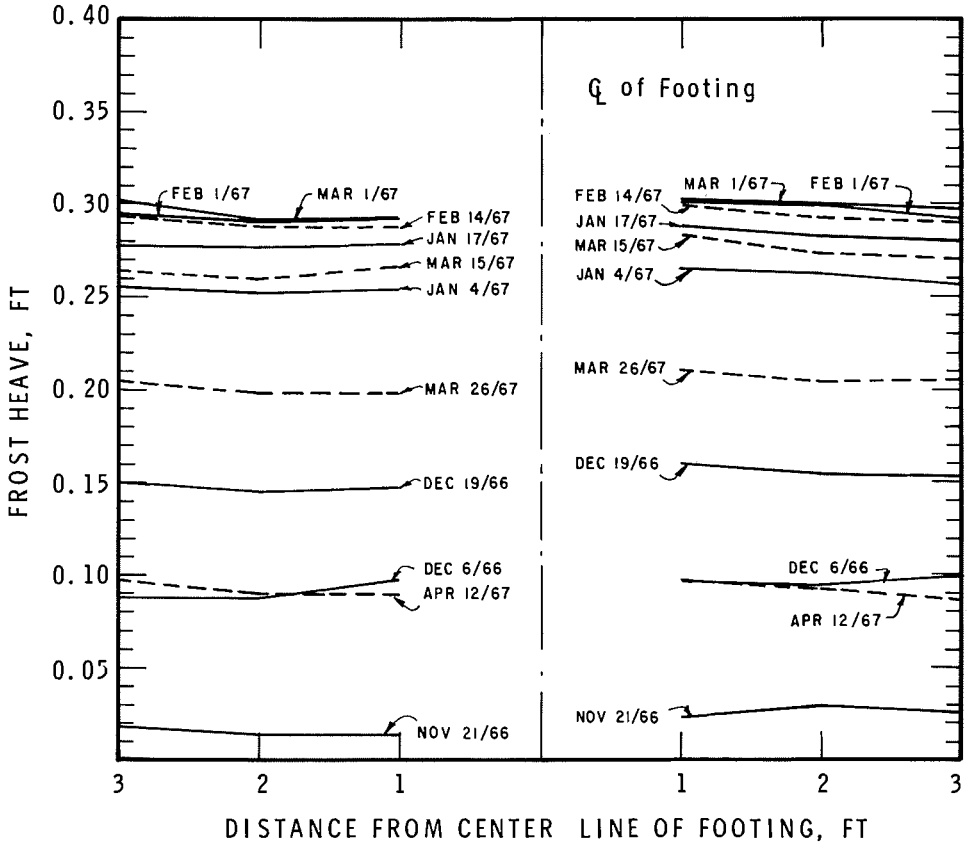

FIG. 7. Surface heave around anchored column for 1966–67.

stress, and p the equivalent uniform surface load.

Then,

$$Q_p = 2\pi a h q_p = \pi a^2 p$$

and

[1] $$p = \frac{2h}{a} q_p$$

According to Wyman (1950), the maximum deflection under the load due to the application of a uniform pressure p to the surface of an ice cover over an area of radius a is

[2] $$W = \frac{p}{k}(1 + b \ker' b)$$

where

k = the modulus of subgrade reaction

$\ker' b$ = the first derivative of one of the modified Bessel functions,

[3] $$b = \frac{a}{l_p}$$

and l_p = radius of relative stiffness

[4] $$= \sqrt[4]{\frac{Eh^3}{12(1 - \nu^2)k}}$$

E = Young's modulus

ν = Poisson's ratio.

For $b < 0.15$, which is not an unreasonable assumption for the problem under discussion,

[5] $$1 + b \ker' b \simeq \frac{\pi b^2}{8}$$

(Wyman (1950) p. 301).

Substituting Eqs. [1], [3], and [4] into [2] gives

[6] $$W = \frac{\pi h a}{4 k l_p^2} q_p$$

Consider now the vertical force exerted by the cover when it is frozen to a long straight wall. Let this shear force per unit width be

[7] $$Q_w = q_w h$$

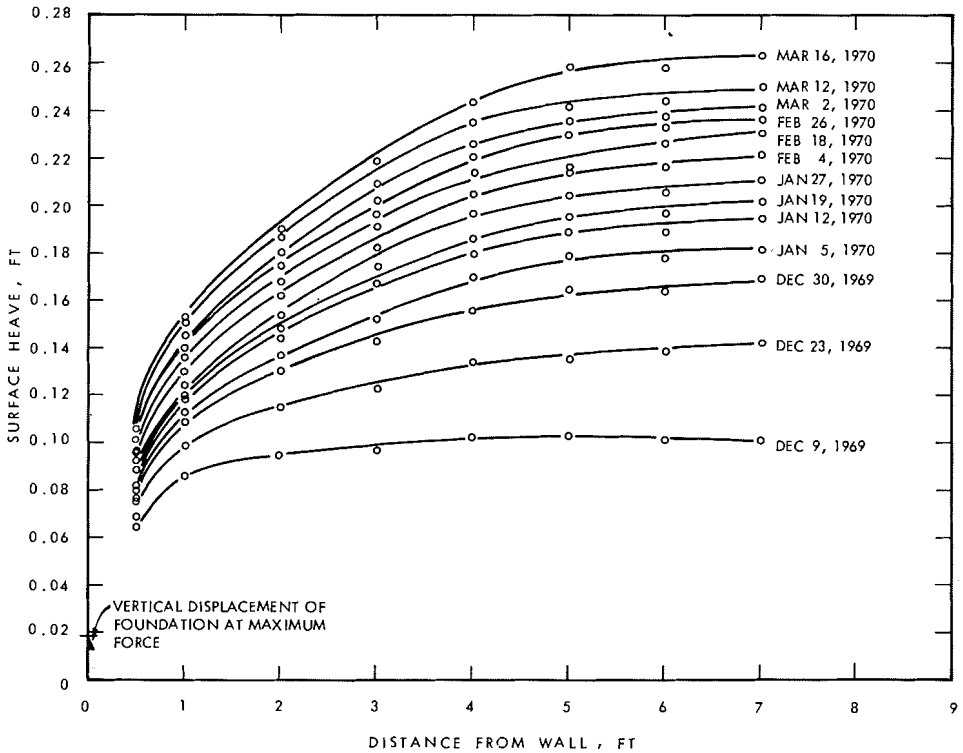

FIG. 8. Ground surface heave at right angles to the long axis of the concrete block foundation wall (average of line #1 and #2, Fig. 3).

where q_w is the shear stress. Gold (1968) gives for the dependence of the shear force on the change in water level:

[8] $$q_w = \frac{Hl_w k}{h}$$

where

[9] $$l_w = \sqrt[4]{\frac{Eh^3}{3k(1-\nu^2)}}$$

Solving for H in Eq. [8] and equating to W, Eq. [6] gives

[10] $$\frac{q_p}{q_w} = \frac{4}{\pi a\sqrt{2}}\, l_p$$

For $a = 1.75$ in. (4.44 cm)

[11] $$\frac{q_p}{q_w} \simeq 0.5\, l_p$$

For the elastic deflection of an ice cover 24 in. thick (61.0 cm), $l_p \simeq 430$ in. (10.9 m). Equation [11] indicates that for this condition the shear stress developed on a 3½-in. diameter pile would be about 200 times greater than that developed on a long straight wall for the same change in water level.

From the foregoing it can be appreciated that the ratio of the shear stress on the pile to that on the wall due to the same amount of frost heave depends on the geometry of the deflection of the ground. For the case of the pile the deflection of the ground would be bowl shaped. The total upward force developed due to restraining the ground in this way is resisted only by the shear force at the surface of the pile. In the case of the long straight wall, each unit length of wall must restrain only the deflected strip of the same width perpendicular to it. The assumption of elastic behavior gives the maximum difference in stress that could occur for the same amount of heave. This difference could be approached, for example, if an ice cover were subjected to a rapid change in water level.

Both ice and frozen soils are viscoelastic materials. For engineering calculations it is often assumed that the stress dependence of the strain rate has the form

[12] $$\dot{\gamma} = k\tau^n$$

where $\dot{\gamma}$ is the shear strain rate due to the shear stress τ, and d and n are constants for given temperature. The value of n has been found to be between 2 and 3.

For a given change in water level or amount of heave, time-dependent deformation will decrease the effective values of the characteristic lengths l_p and l_w and thereby reduce the shear stress developed on the pile or wall. In addition, shear flow will occur relatively much more rapidly around the pile than near the wall because of the higher shear stress induced for a given heave and the power law dependence of the shear rate on the shear stress. These effects will reduce the ratio of the shear stress on the pile to that on the wall.

The observations show that for the conditions of the study, this ratio was reduced to about 2. Equation [12] indicates that for this ratio in shear stress, the strain rate at the pile would be 4 to 8 times that at the wall. Measurements of the deflection showed that the rate of strain induced in the soil for the pile was sufficiently large that the deformation associated with heave was confined to a relatively thin zone immediately adjacent to it. For the wall, the stresses were sufficiently small that the zone of shear deformation (*i.e.* the region of deflected surface) extended a significant distance from it. A viscoelastic theory relating adfreezing forces developed on structures of various geometries to heave and the rate of heave is still to be developed.

Mention should also be made of the effect of temperature. The shearing resistance of frozen ground and ice increases with decrease in temperature. In the present study it was assumed that this resistance was constant over the full surface of adfreezing for both the pile and the wall. As the temperature of the ground increased with depth to about 0° C at the freezing plane, the resistance to shear would have decreased correspondingly. This effect should be kept in mind when interpreting the results.

General Discussion and Conclusion

The experimental results show that the pattern of heave and the adfreezing forces are influenced by the shape and size of the structure to which the heaving soil is frozen. This is in agreement with the theoretical considerations based on the analogy between the lifting force of ice sheets on structures of different geometry and that of a frost-heaving layer.

The heave pattern around columns and movement of the frost heaving soil adjacent to a circular column appears to be either type (*a*) or (*c*) as shown in Fig. 1. From these studies it is not possible to differentiate between these two types. Adjacent to long foundation walls the heave pattern is either type (*d*) or (*e*) and there is a noticeable and well defined dependence of heave on distance from the foundation. It is not easy to determine in the field whether the frozen soil slides along a column or foundation wall or shears in the soil immediately adjacent to structures. Such studies should probably be carried out in the laboratory. Finally, it would appear that under field conditions the heaving forces transmitted to wood columns are somewhat less than those transmitted to concrete and steel columns.

Acknowledgment

The authors wish to thank their colleagues in the Geotechnical Section for assistance, comments, and criticism, and particularly D. Eldred for many of the measurements and R. Frederking for helpful discussions of strength and deformation behavior of ice sheets around structures. This paper is a contribution from the Division of Building Research, National Research Council of Canada and is published with the approval of the Director of the Division.

CRORY, F. E., and REED, R. E. 1965. Measurement of frost heaving forces on piles. U.S. Army Mater. Command, Cold Reg. Res. Eng. Lab., Hanover, N.H. TR 145.

CRAWFORD, C. B. 1961. Engineering studies of Leda clay soils in Canada. Roy. Soc. Can. Spec. Rep. No. 3, University of Toronto Press (Revised 1965).

GOLD, L. W. 1968. Vertical forces due to ice. *In* Ice pressures against structures. Nat. Res. Counc. Can., Assoc. Comm. Geotech. Res., Tech. Memo. 92, Ottawa. pp. 150–151.

KINOSHITA, S., and ONO, T. 1963. Heaving forces of frozen ground. I. Mainly on the results of field research. Low Temp. Sci. Lab., Teron Kagaku, Ser. A, 21, pp 117–139. (Nat. Res. Counc. Can., Ottawa, Tech. Translation 1246, 1966).

PENNER, E. 1970. Frost heaving forces in Leda clay. Can. Geotech. J., 7(1), pp. 8–16.

PENNER, E., and BURN, K. N. 1970. Adfreezing and

frost heaving of foundations. Nat. Res. Counc. Can., Div. Build. Res., Can. Build. Dig. **128**.

PENNER, E., and IRWIN, W. W. 1969. Adfreezing of Leda clay to anchored footing columns. Can. Geotech. J., **6**(3), pp. 327–337.

SALTYKOV, N. I. 1944. Calculating frost heaving forces on foundations. Izvestiia Akademii Nauk SSSR, Otdelenie Tekhnickeskikh Nauk, No. 6, pp. 305–412. (Translation 46 by Jaroslov J. Peel, SIPRE Bibliography Project, Library of Congress, Washington.)

TROW, W. A. 1955. Frost action on small footings. Highw. Res. Board, Washington, Bull. 100, pp. 22–27.

TSYTOVICH, N. A. 1959. Principles of geocryology; Part II, Engineering geocryology; Chapt. III, Basic mechanics of freezing, frozen and thawing soils, pp. 28–79. (Nat. Res. Counc. Can., Ottawa, Tech. Transl. 1239, 1966.)

VIALOV, S. S. 1959. Reologicheskie Sovistva i Nesushchaia Sposobnost Merzlykh Gruntov. Izdatel'stov Akademii Nauk SSSR, Moscow. (Rheological properties and bearing capacity of frozen soils.) U.S. Army Mater. Command, Cold Reg. Res. Eng. Lab., Hanover, Tech. Translation 74, September 1965.

WYMAN, M. 1950. Deflections of an infinite plate. Can. J. Res. Ser. A, **28**, pp. 293–302.